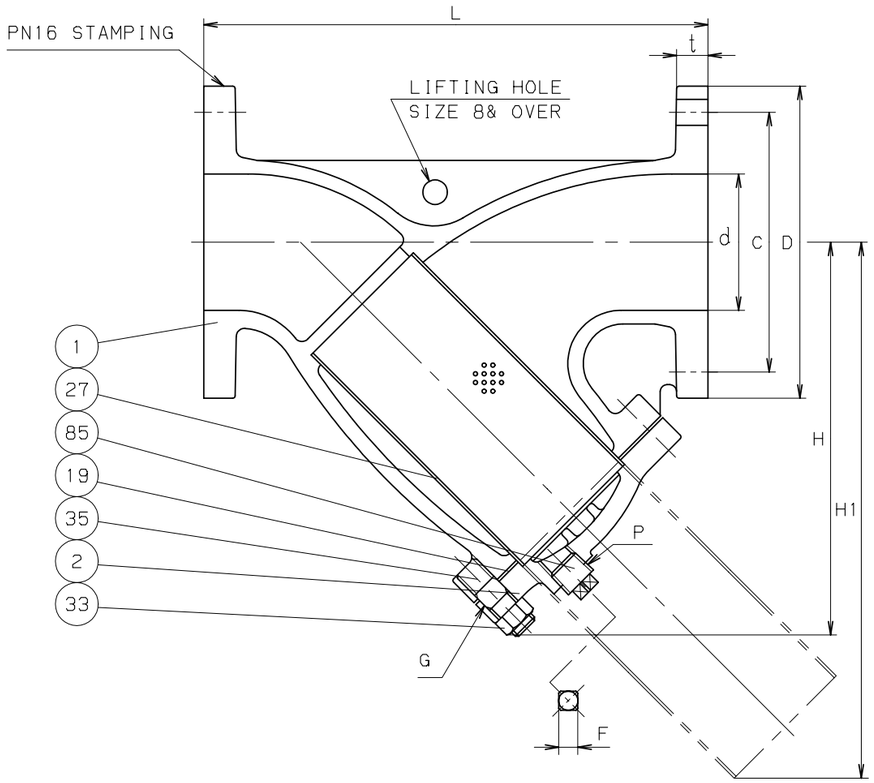

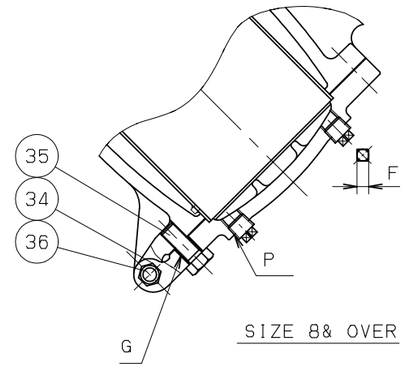

SIZE 8& OVER

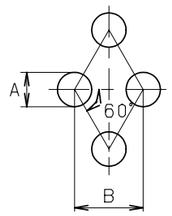

HOLE SIZE OF SCREEN

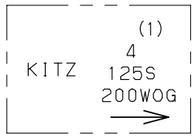

MARKING ON THE BODY

NO	NAME OF PARTS	QTY	MATERIALS	SPECIFICATIONS
1	BODY	1	CAST IRON	A126 CL.B
2	COVER	1	CAST IRON	A126 CL.B
19	GASKET	1	NON ASBESTOS SHEET	
27	SCREEN	1	STAINLESS STEEL	A276 TYPE304
33	COVER NUT	1S	CARBON STEEL	A307 Gr.B
				(SIZE 2-6)
34	COVER HINGE NUT	1	CARBON STEEL	A563 Gr.A
35	COVER BOLT	1S	CARBON STEEL	A307 Gr.B
36	COVER HINGE BOLT	1	CARBON STEEL	A307 Gr.B
85	PLUG	1	STAINLESS STEEL	A276 TYPE304
				(SIZE 2-6)
		2	STAINLESS STEEL	A276 TYPE304
				(SIZE 8& OVER)
			1S=1 SET	

DIMENSIONS. UNIT:mm

NOMINAL SIZE						END FLANGE												
						(2)	BOLT HOLE			BOLT	(2)							
in.	mm	d	L	H	H1	D	C	NO.	h	SIZE	t	P	A	B	F	G		
2	50	50	250	168	208	-	-	-	-	-	-	Rc1/2	1.4	2.4	14	M12		
2.1/2	65	65	285	212	289	178	145	4	19	M16	17.5	Rc1/2	1.5	2.5	14	M12		
3	80	80	315	242	335	190	160	8	19	M16	19.1	Rc1/2	1.5	2.5	14	M12		
4	100	100	370	284	388	229	180	8	19	M16	23.9	Rc1/2	1.5	2.5	14	M16		
5	125	125	420	325	446	254	210	8	19	M16	23.9	Rc3/4	1.5	2.5	17	M16		
6	150	150	490	370	497	279	240	8	23	M20	25.4	Rc3/4	3	5	17	M20		
8	200	200	570	440	589	343	295	12	23	M20	28.6	Rc3/4	3	5	17	M20		
10	250	250	680	515	694	406	355	12	28	M24	30.2	Rc3/4	5	7	17	M22		
12	300	300	800	600	818	483	410	12	28	M24	31.8	Rc3/4	5	7	17	M22		
14	350	350	950	740	993	533	470	16	28	M24	35	Rc3/4	5	7	17	M22		

NOTE (1) VALVE SIZE(inch) IDENTIFICATION.
(2) "t" SHALL BE IN ACCORDANCE WITH ASME B16.1 CLASS 125.

STANDARD		
	FACE TO FACE OR END TO END	KITZ STANDARD
	END CONNECTION	BS EN1092-2 PN16
	WALL THICKNESS	KITZ STANDARD
	PRESSURE TEST	KITZ STANDARD
FIGURE		125FCY

CLASS 125 CAST IRON
Y TYPE STRAINER

BOLTED COVER, FLANGED ENDS. (BS EN1092-2 PN16)

DATE APPD	July.18' 17	DRAWING NO	△		
APPD BY	Y. Kono	B36-170039	△		
CHKD BY	K. Kohama		△		
DSGND BY	M. Naito		△		
DRAWD BY	R. Kumazaki	REV-00	MARK	DATE	BY

KITZ CORPORATION

KITZ

SA-0460